Plastic bodied limit switch
Series IN65

Description **IN65-A2Z AHM**	Article number **6083000332**

Operating symbol

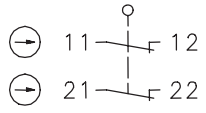

Operating diagram

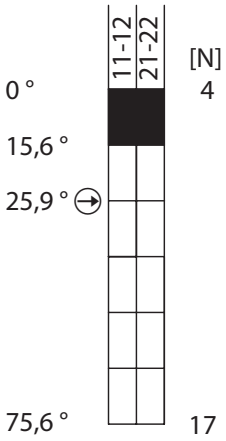

ON OFF

Tolerance:
Operating point ± 3,5 °;
Direct opening action + 3,5 °
Operating force ± 10 %

Fixed positioning with
e.g. fixing screw M5
according to the standard
DIN EN ISO 4762.

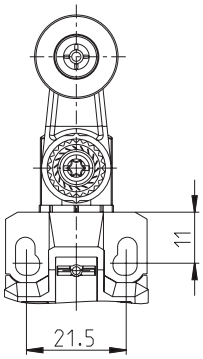

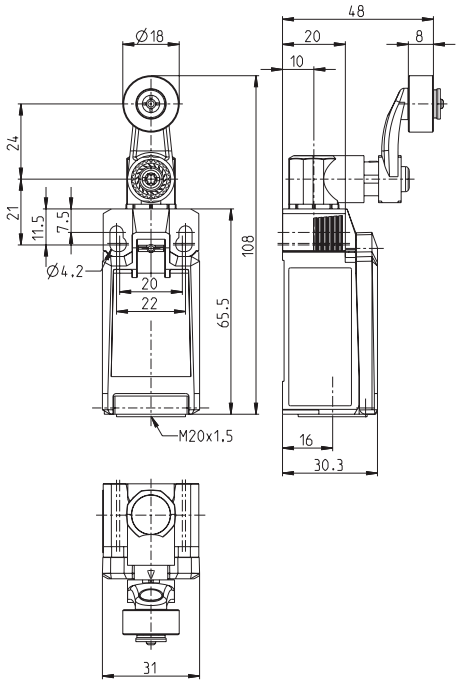

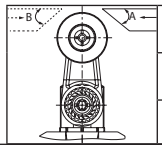

m/s	0,1	0,5	1	2	5
A	45°	45°	45°	40°	30°
B	45°	45°	45°	40°	30°

Electrical Data		
Rated insulation voltage	U_i	400 V
Rated impulse withstand voltage	U_{imp}	4 kV
Rated operational voltage	U_e	240 V AC / 24 V DC
Rated supply frequency AC		50 / 60 Hz
Overvoltage category		II acc. EN 60947-1 annex H table H1
Conv. thermal current	I_{the}	5 A
Minimum current		1 mA
Utilization category		AC 15, U_e/I_e 240 V / 3 A DC 13, U_e/I_e 24 V / 4 A
Direct opening action	⊖	acc. IEC/EN 60947-5-1, annex K; direct opening force: 29 N
Short-circuit protective device		Fuse 4 A gG
Rated conditional short-circuit current		400 A
Max. contact resistance		25 mOhm (unused)
Protection class		II, totally insulated

Mechanical data		
Enclosure		Thermoplastic, glass fibre reinforced (UL 94-V0)
Cover		Thermoplastic, glass fibre reinforced (UL 94-V0)
Actuator		Metal lever with steel roller / lever in 15 ° increments adjustable
Actuating force	F_B	10 N ≤ F_B ≤ 30 N
Operating temperature		-30 °C ... +75 °C
Storage temperature		-40 °C ... +80 °C
Protection type		IP66 / IP67 acc. EN 60529
Pollution degree (built-in switch)		3
Contact material		silver
Device Class (built-in switch)		Category E (MC3+CC2+SC1) acc. EN 60947-1 annex Q
Contact type		2 N.C. (Form Zb)
Operating rate	V	0,06 m/min ≤ V ≤ 30 m/min
Bounce duration	ms	The value depends on the operating rate.
Switchover time	ms	The value depends on the operating rate.
Switching frequency		≤ 60 / min.
Mechanical life		10 x 10^6 operating cycles
Mission time		≤20 years
Connection		4 screw connections (M3)
Conductor cross-sections		Solid or Litz wire with ferrules 0,34 mm^2 - 1,5 mm^2; AWG 22-16
Cable entrance		1 x M20 x1,5
Weight		≈ 0,1 kg
Installation position		operator definable

Actuation
The actuating device is preferably started from 2 sides. By lifting the clamp the actuation assembly can be rotated in 45° increments such that 16 actuation directions are possible. The actuation assembly is to be again fastened to the housing by lowering the clamp.

ID for safety engineering	
B10d N.C.	20 x 10^6 cycles
B10d N.O.	1 x 10^6 cycles

Standards
VDE 0660 T200, DIN EN 60947-5-1, IEC 60947-5-1
UL 508 / CSA C22.2 No.14
DIN EN ISO 13849-1
EN81-20
EN81-50

EU Conformity
acc. to directive 2006/42/EC (Safety-of-Machinery-Directive)

Approvals	
	DGUV (AC 15, U_e/I_e 240 V / 1,5 A; DC 13, U_e/I_e 24 V / 1,5 A)
	CCC (AC 15, U_e/I_e 240 V / 1,5 A; DC 13, U_e/I_e 24 V / 1,5 A)
	${}_{C}CSA_{US}$ B300, 240Vac 1.5A G.P., 24Vdc 1.5A R. Enclosure Type 4X

Notes
The degree of protection (IP code) specified applies solely to a property closed cover and the use of an equivalent cable gland with adequate cable.